CERTS Project
Voltage Stability Applications using Synchrophasor Data

Report 2
PMU Location and Study Region Selection

Submitted by

Joe H. Chow and Scott G. Ghiocel

Rensselaer Polytechnic Institute
110 8th Street
Troy, NY 12180-3590

January 31, 2014

Prepared for

Dejan Sobajic, Project Manager

Office of Electricity Delivery and Energy Reliability Transmission Reliability Program of the U.S. Department of Energy Under Contract No. DE-AC02-05CH11231

Acknowledgement

The work described in this paper was coordinated by the Consortium for Electric Reliability Technology Solutions, and funded by the Office of Electricity Delivery and Energy Reliability, Transmission Reliability Program of the U.S. Department of Energy through a contract with Rensselaer Polytechnic Institute administered by the Lawrence Berkeley National Laboratory. This work was supported by the Lawrence Berkeley National Lab (LBL) subcontract 7040520 of prime contract DE-AC02-05CH11231 between LBL and Department of Energy (DOE). The authors gratefully acknowledge the support provided by Lawrence Berkeley National Lab (LBL) and Department of Energy (DOE).

Disclaimer

This document was prepared as an account of work sponsored by the United States Government. While this document is believed to contain correct information, neither the United States Government nor any agency thereof, nor The Regents of the University of California, nor any of their employees, makes any warranty, express or implied, or assumes any legal responsibility for the accuracy, completeness, or usefulness of any information, apparatus, product, or process disclosed, or represents that its use would not infringe privately owned rights. Reference herein to any specific commercial product, process, or service by its trade name, trademark, manufacturer, or otherwise, does not necessarily constitute or imply its endorsement, recommendation, or favoring by the United States Government or any agency thereof, or The Regents of the University of California. The views and opinions of authors expressed herein do not necessarily state or reflect those of the United States Government or any agency thereof, or The Regents of the University of California.

1. Introduction

To select study regions for voltage stability analysis, we considered two main factors:

- Availability of measurement data
- Importance of the study region to system operators

In collaboration with Bonneville Power Administration (BPA) and Southern California Edison (SCE), we identified potential study regions based on measurement data availability. Due to the ongoing PMU installation, testing, and validation activities, recent phasor measurement data and full coverage was not available at some locations. In these cases, alternative areas were chosen, or SCADA data was used in lieu of PMU data for demonstration purposes. When the PMU data is available, it will replace the SCADA data in our algorithms.

Our final study region selection resulted in two regions: a wind hub in the BPA system, and a regional load area in Central California. Both regions have known concerns with regards to voltage stability.

2. Study Region #1: BPA Wind Hub

The BPA study region is a wind power hub located near the Washington-Oregon border. The wind power hub is an interconnection of approximately 600 MW of wind power at the Jones Canyon 230 kV substation. The power is supplied by six wind plants, which consist of both Type 2 and Type 3 wind turbines. The Jones Canyon substation is in the middle of a long transmission line connecting other generation (McNary 230 kV substation) to a load area (Santiam 230 kV substation). The line connecting Jones Canyon to McNary is a shorter, stronger line, while the connection to Santiam is longer and weaker. The system diagram is shown in Fig. 1, where Santiam is the substation to the west and McNary is the substation to the east.

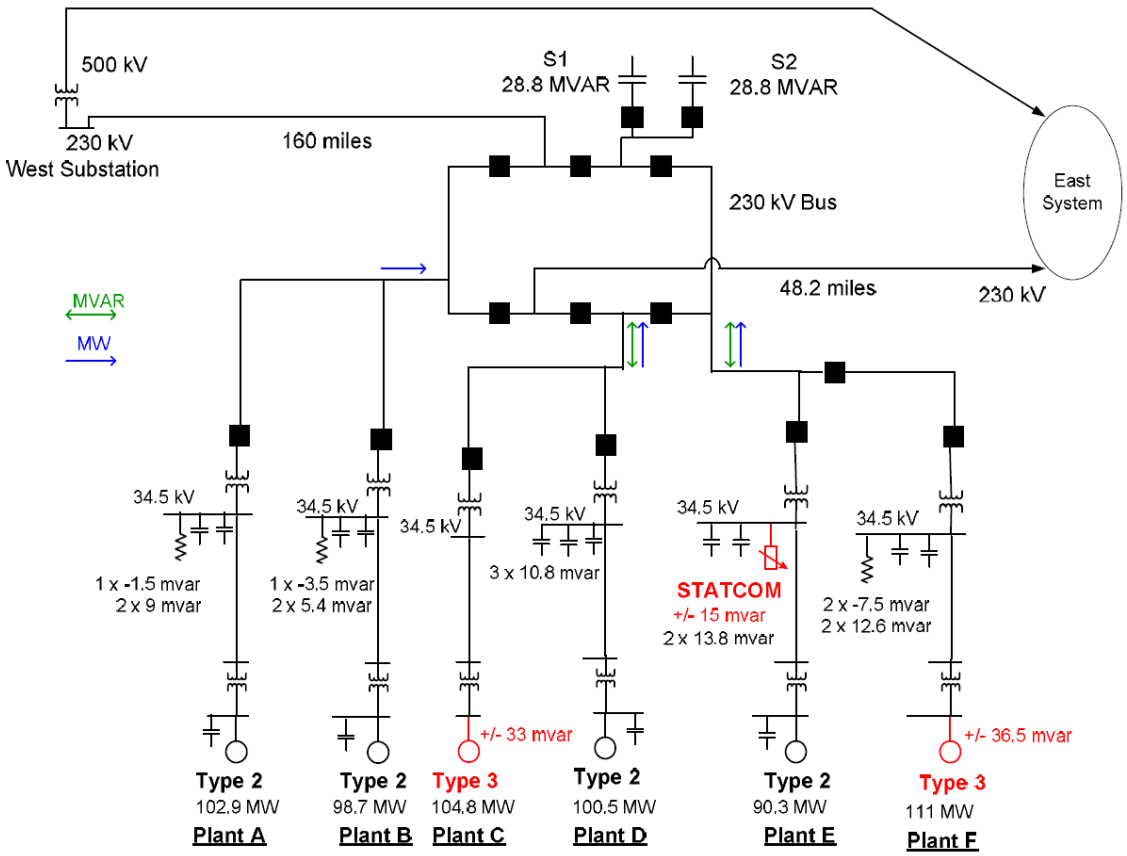

Figure 1. BPA Wind Hub system [1].

In the BPA Wind Hub system, the power output of the wind plants is limited by voltage stability concerns. One issue arises when the wind plants are curtailed. When the curtailment is released, the output of the wind plants can change rapidly, leading to voltage fluctuations. In Fig. 2, we show the output of the six wind plants over a 10-hour period, in which multiple cases of sudden ramping can be observed.

[1] E. Heredia, D. Kosterev, M. Donnelly, "Wind Hub Reactive Resource Coordination and Voltage Control Study by Sequence Power Flow, *2013 IEEE PES General Meeting*, July 2013.

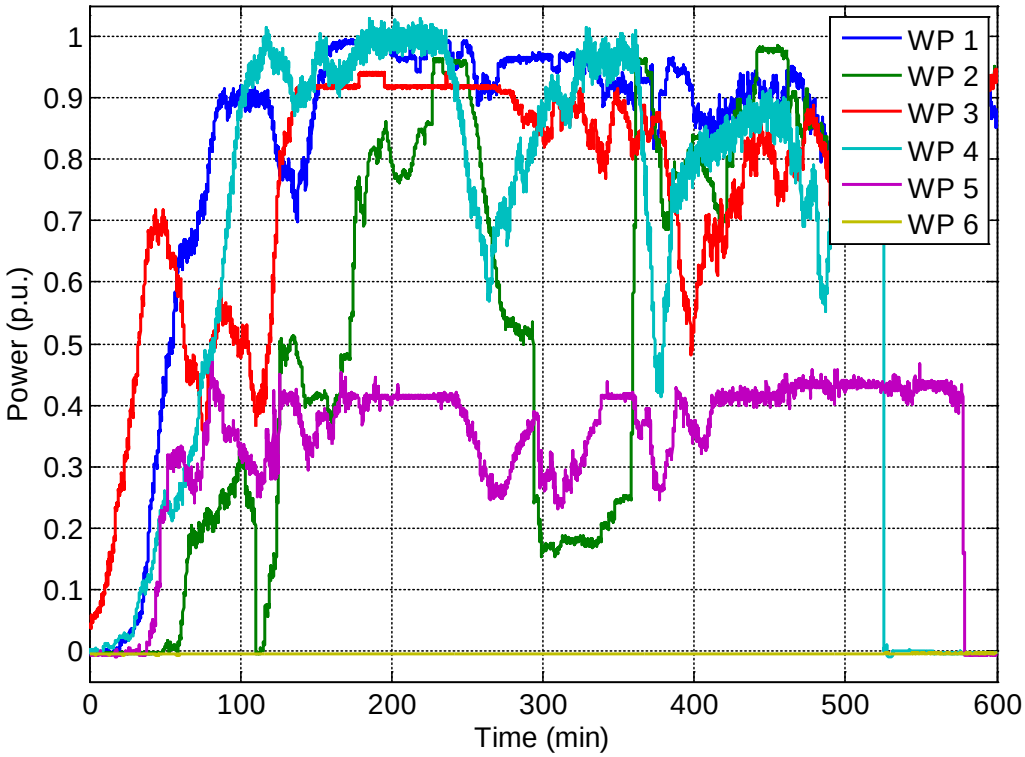

Figure 2. BPA Wind Hub output over a 10-hour period.

Exacerbating this voltage problem is the fact that the Type 2 plants consume more reactive power as active power output is increased. Shunt compensation is used to mitigate this issue, but the response time of the capacitors is usually long compared to the fast ramping of the wind plants.

In the BPA Wind Hub system, four of the six wind plants (Plants A-D) were installed before newer requirements for voltage regulation were instituted. Thus they are only designed to provide a near-unity power factor using shunt compensation. However, there are concerns about voltage stability limits if the shunts do not operate.

A recent operating scenario highlighted the severity of these voltage fluctuations. During this period, the strong line connecting Jones Canyon to McNary (east substation) was out of service. Thus the weak connection to Santiam was the only way to deliver power from the wind plants. The data show extreme long-term voltage fluctuations as the wind plants were alternately curtailed and released from curtailment. In Fig. 3, we show a plot of the voltages from this event.

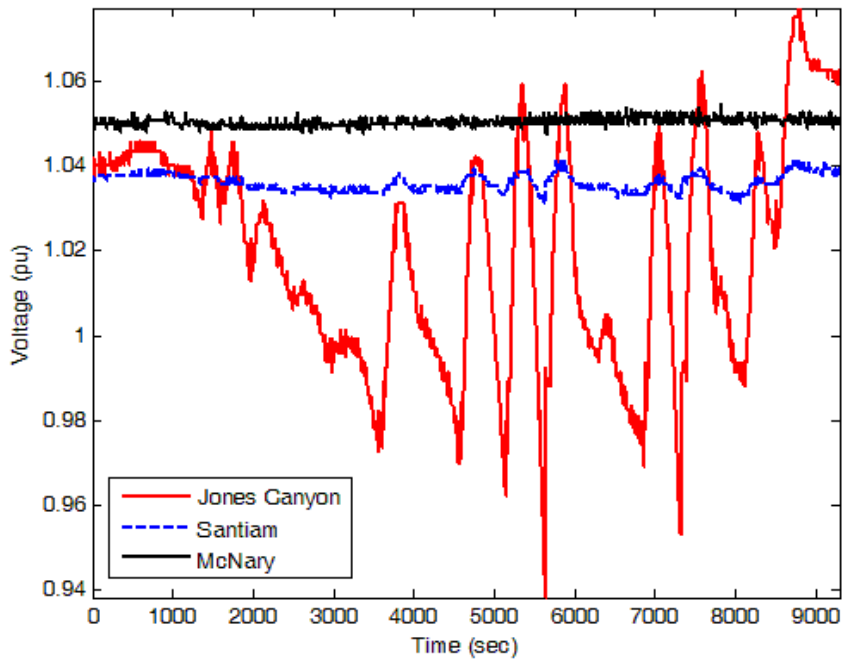

Figure 3. BPA Wind Hub voltages with strong line out of service.

In this study region, the idea is to identify the short-term and long-term margins for wind power output. The short-term limit will not include the slower-response shunt compensation, but the long-term limit will include their effects on the stability margin. The computed margins will assist the system operator in determining appropriate levels of curtailment to facilitate the maximum amount of wind power generation without risking voltage instability.

3. Study Region #2: SCE Central California System

The selected SCE study region is a portion of the 230 kV network in Central California. The region is characterized by a long, radial-type network connecting the Big Creek generation area in the north to the Los Angeles load area to the south. In particular, we will use PMU data from five substations: Big Creek 3, Rector, Springville, Vestal, and Magunden to establish an observable region in Central California. The PMU locations are identified by circles in Fig. 5.

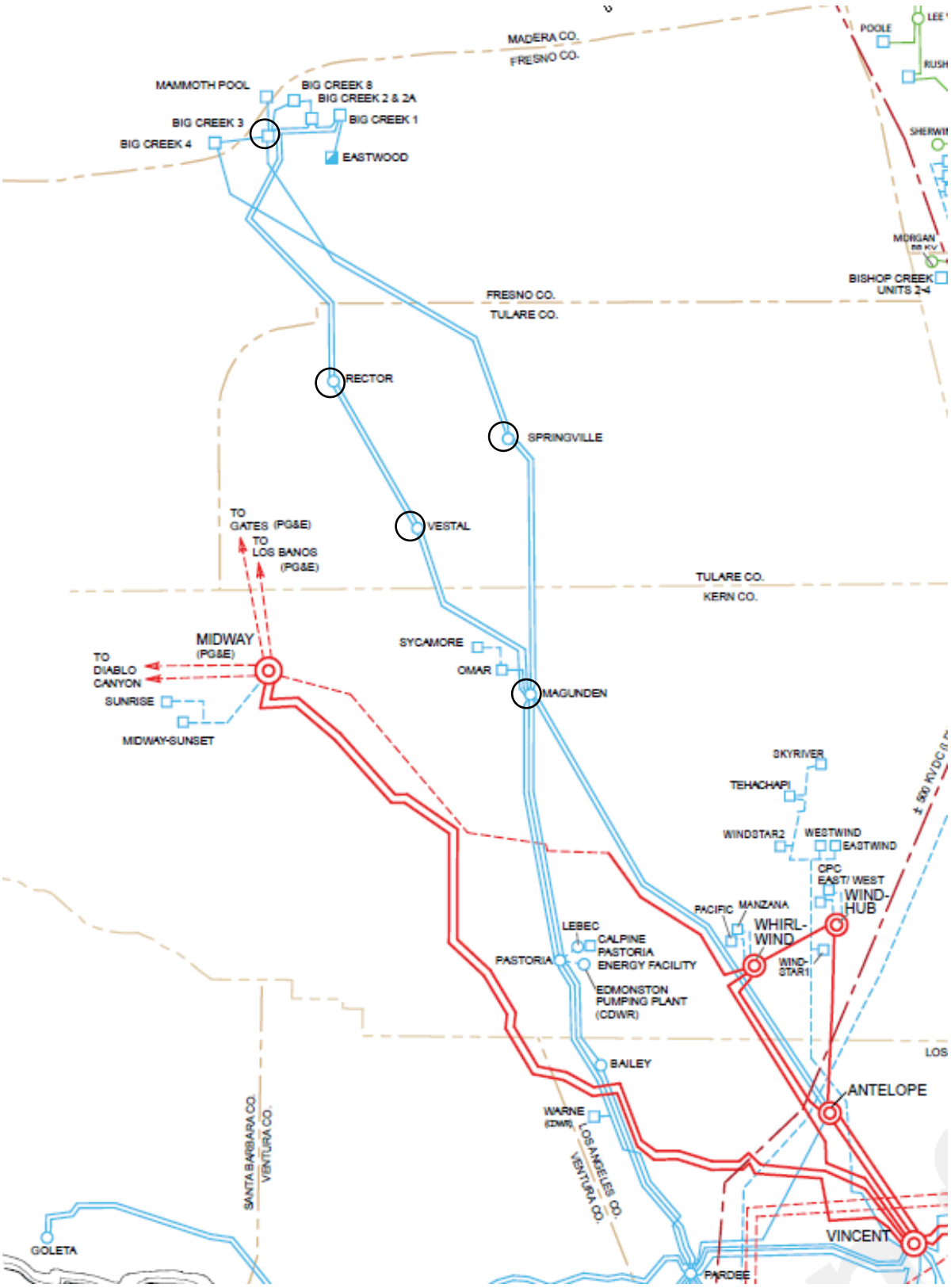

Figure 4. SCE Central California study region

The SCE Central California study area is not a major load center. However, there are significant levels of industrial loads (oil refineries) in the region that contribute to voltage stability concerns. The area near the Rector substation is particularly problematic due to limited voltage support. Reactive power to support active power transfer from Big Creek to the south also adds to the voltage stability problem.

In this case, the objective is somewhat similar to the BPA Wind Hub, namely, to identify the power transfer limits along the 230 kV corridor to Los Angeles. In addition, the PMU data will be used to evaluate the performance of the SVC at the Rector substation and other shunt devices with respect to voltage support.

4. Status of Data Collection

For the BPA Wind Hub study region, BPA has provided CSV-formatted SCADA measurement data for multiple hours in 7 different days. The resolution of the data is These data sets have different system conditions which will enhance the testing of the voltage stability algorithms. The network data has been provided as an EPC file, which is the ASCII format for GE PSLF. We have translated the network data into MATLAB for use with our algorithms.

For the SCE Central California study region, we have obtained 4 data sets of PMU data in the Power System Outlook DST format. The data can be readily exported from Power System Outlook program in CSV format for use in MATLAB. Each of the 4 data sets contains 5 days (120 hours) of data at 1-minute resolution. This data will be used for preliminary studies, and higher resolution data will be extracted for smaller time windows of interest. SCE has also provided the network data as an ASCII-formated EPC file for easy translation into MATLAB.